Coils - Connectors

COIL R7 - CLASS H - 18 W

OD.02.21 - X - Y - Z - 00

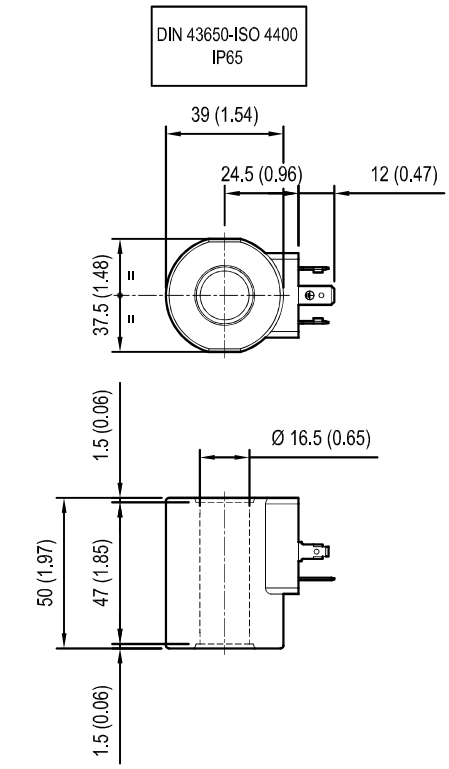

[mm / Inches]

TECHNICAL DATA

Weight: 0.31 kg (0.71 lbs)
Heat insulation Class H: 180°C (356°F)
Ambient temperature range: -30/+80°C (-22/+284°F)
Inlet voltage fluctuations must not exceed ±15% of nominal voltage to obtain correct operation and long life coils.

X	Y	Connections	Circuit	Voltage
01	30	DIN 43650 - ISO 4400	Standard	DC

Z	Voltage V	Resistance Ohm (±7%)	Power W	Current A		ΔT °C (°F)
	Nominal	Ta = 20-25°C (68-77°F)	Cold coil	Cold coil	Hot coil	1 hour energized at Ta=20-25°C (68-77°F) Nominal voltage
OB	12 DC	7.9	18	1.5	1.1	90-105 (194-221)

Preferred types (readily available)

Type	Material number
OD02210130OB00	R934001302

Type	Material number

Further types available by request