PUMP DATA	
DISPLACEMENT	16,0 ccm
MAX.CONT.PRESSURE	250 bar
SPEED RATE 500 TO	2700 min^{-1}
MAX. INPUT SHAFT TORQUE	198 NM
ROTATION	CLOCKWISE

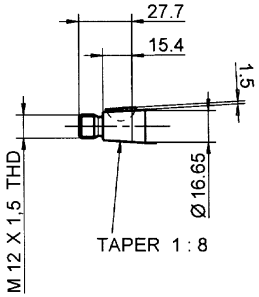

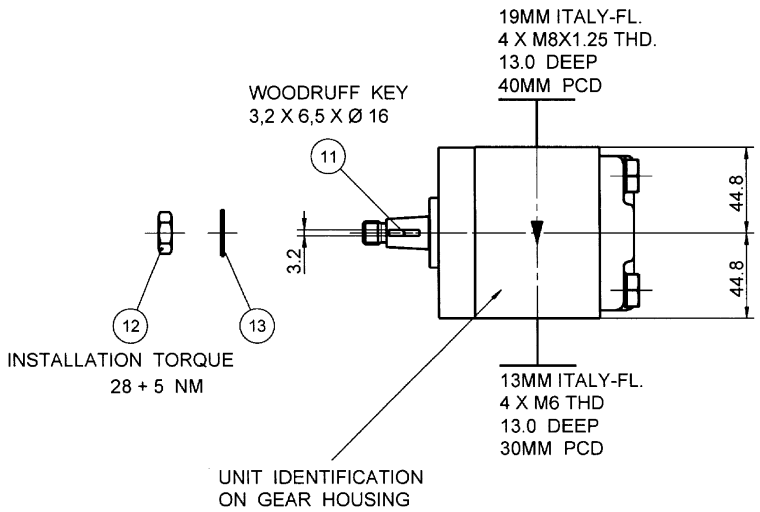

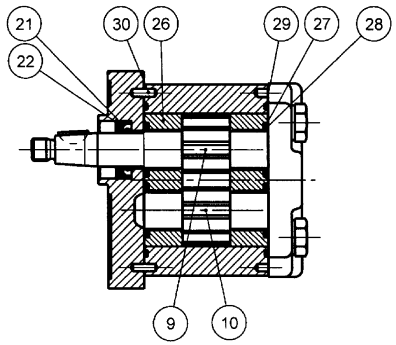

NOTE

1 FOR ASSEMBLY INSTRUCTIONS SEE DWG. NO. "511-B1" "PGP511 PUMP ASSEMBLY INSTRUCTIONS".

ITEM	PART NO	REQD		ITEM	PART NO	REQD	
28	8611-015-000	2	SEAL. BK-UP	36			
27	8611-016-00R	2	SEAL. CHAN.	35			
26	8898-207-00U	2	THRBLK/BSHG	34			
25				33			
24				32			
23				31			
22	9211-323-00B	1	RING, SNAP	30	391 2080 078	2	PIN. DOWEL
21	8301-019-00K	1	SEAL. LIP	29	9313-145-00B	2	SEAL. SECT.

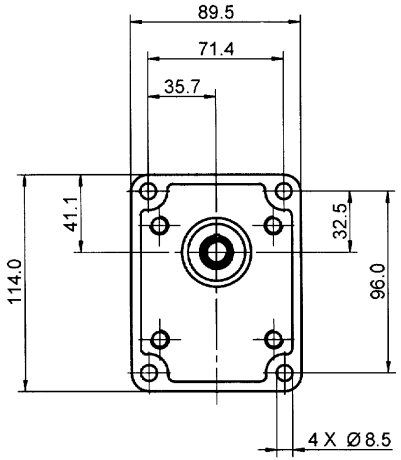

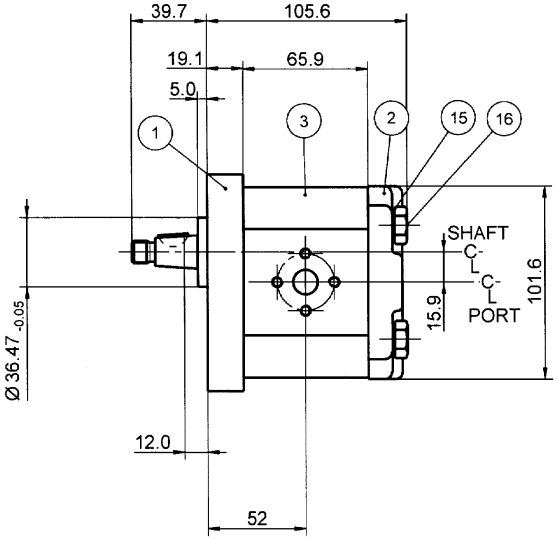

ITEM	PART NO	REQ'D	DESCRIPTION
20	SEE ABOVE	1	BOM. COMPONENT
19			
18			
17			
16	391 1401 544	4	SCREW (95 MM)
15	391 3782 231	4	WASHER
14			
13	391 3782 307	1	WASHER
12	391 1451 168	1	NUT
11	391 1781 112	1	KEY
10	334 2716 000	1	DRIVEN GEAR
9	334 1816 601	1	DRIVE GEAR
8			
7			
6			
5			
4			
3	334 8116 907	1	HOUSING. GEAR
2	332 3000 100	1	HOUSING. PEC
1	334 5041 202	1	HOUSING. SEC

BOM. COMPONENT

THIRD ANGLE PROJECTION

EXP NO.

FIRST USED

01 - 10 - 993

334 9111 293

DWG. REDRAWN

SYM.	REVISIONS

TH S DOCUMENT CONTAINS INFORMATION THAT IS CONFIDENTIAL AND PROPRIETARY TO PARKER HANNIFIN CORPORATION ("PARKER"). THIS DOCUMENT IS FURNISHED ON THE UNTERSTANDING THAT THE DOCUMENT AND INFORMATION WILL BE NOT COPIED OR DISCLOSED TO OTHERS OR USED FOR ANY PURPOSE OTHER THAN CONDUCTING BUSINESS WITH PARKER, AND WILL BE RETURNED AND ALL FURTHER USE DISCONTINUED UPON REQUEST BY PARKER. ALL RIGHTS RESERVED

PGP511A0160CS2D3NL2L1B1B1

Parker — Hydraulic Controls Division, Sachsenhydraulik GmbH, Chemnitz

MATERIAL	ADM CTR	P		DR.BY	DATE	CH.BY	DATE	SCALE
	REV DTE	26JUN03		PG	08NOV01	WS	08NOV01	1/2
H.E.-STD:	WT		DIMENSIONS ARE MM	334 9111 293				

© 2003 Parker-Hannifin Corporation