Ordering code

01	02	03		04	05	06	07	08	09	10		11
A17F	**O**	045	**/**	**10**	**N**	**L**	**W**	**K0**	E8	1	**–**	0

Axial piston unit

01	Bent-axis design, fixed, nominal pressure 300 bar, maximum pressure 350 bar, for commercial vehicles (truck)	**A17F**

Operating mode

02	Pump, open circuit	**O**

Sizes (NG)

03	Geometric displacement, see table of values on page 5	**023**	**032**	**045**	**063**	**080**	**107**

Series

04	Series 1, index 0	**10**

Configuration of ports and fastening threads

05	Metric, port threads with profiled sealing ring according to DIN 3852	**N**

Direction of rotation[1)]

06	Viewed on drive shaft, counter-clockwise	**L**

Seals

07	FKM (fluor-caoutchouc) including the 2 shaft seal rings in FKM	**W**

Mounting flange

08	Special flange ISO 7653-1985 (for trucks)	**K0**

Drive shaft

09	Splined shaft similar to DIN ISO 14 (for trucks)	**E8**
	Splined shaft E8 with coupling flange	**C8**

Port plate for service lines

10	Threaded ports A and S at rear	**1**
	Threaded ports A and S at rear, with suction stud mounted in S	**2**

Standard / special version

11	Standard version	**0**
	Special version	**S**

1) Changing the direction of rotation, see page 7

Table of values

Theoretical values, without efficiency and tolerances;
values rounded

Size		NG		23	32	45	63	80	107
Displacement geometric, per revolution		V_g	cm^3	22.9	32	45.6	63	80.4	106.7
Speed maximum[1)]	at V_g	n_{nom}	rpm	3050	2750	2650	2200	2150	2000
Speed maximum[2)]		n_{max}	rpm	4300	3900	3800	3200	3100	2800
Flow	at n_{nom} and V_g	q_v	L/min	70	88	121	139	173	213
Power	at n_{nom}, V_g and Δp = 300 bar	P	kW	35	44	60	69	86	107
Torque	at V_g and Δp = 300 bar	T	Nm	109	153	218	301	384	509
Rotary stiffness		c	kNm/rad	2.56	3.12	4.18	6.25	8.73	11.2
Moment of inertia for rotary group		J_{GR}	kgm^2	0.0012	0.0012	0.003	0.0042	0.0072	0.0116
Maximum angular acceleration		α	rad/s^2	6500	6500	14600	7500	6000	4500
Case volume		V	L	0.25	0.29	0.4	0.5	0.6	0.75
Mass moment		T_G	Nm	4.7	4.7	8.6	9.9	15.3	20
Mass (approx.)		m	kg	5.9	5.9	8.4	9.3	12.3	15.0

1) The values are valid:
- at an absolute pressure p_{abs} = 1 bar at suction port S
- for the optimum viscosity range from ν_{opt} = 36 to 16 mm^2/s
- with hydraulic fluid based on mineral oils

2) Maximum speed (limiting speed) with increased inlet pressure p_{abs} at suction port S, see the following diagram.

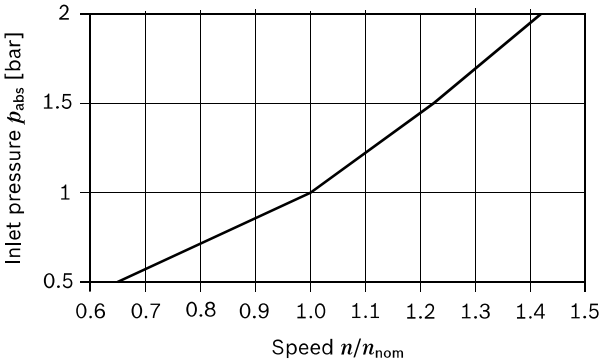

Note

Operation above the maximum values or below the minimum values may result in a loss of function, a reduced service life or in the destruction of the axial piston unit. Other permissible limit values, with respect to speed variation, reduced angular acceleration as a function of the frequency and the permissible start up angular acceleration (lower than the maximum angular acceleration) can be found in data sheet RE 90261.

Determining the operating characteristics

Formulas		
Flow	$q_v = \frac{V_g \cdot n \cdot \eta_v}{1000}$	[L/min]
Torque	$T = \frac{V_g \cdot \Delta p}{20 \cdot \pi \cdot \eta_{mh}}$	[Nm]
Power	$P = \frac{2\pi \cdot T \cdot n}{60000} = \frac{q_v \cdot \Delta p}{600 \cdot \eta_t}$	[kW]

Key		
V_g	=	Displacement per revolution in cm^3
Δp	=	Differential pressure in bar
n	=	Speed in rpm
η_v	=	Volumetric efficiency
η_{mh}	=	Mechanical-hydraulic efficiency
η_t	=	Total efficiency ($\eta_t = \eta_v \cdot \eta_{mh}$)

Permissible axial forces of the drive shaft

The values given are maximum values and do not apply to continuous operation. For drives with radial loading (pinion, V-belt drives), please contact us!

Size		NG		23	32	45	63	80	107
When standstill or when axial piston unit operating in non-pressurized conditions		$\pm F_{ax\ max}$	N	0	0	0	0	0	0
Permissible axial force per bar operating pressure	$F_{ax} \pm$ 	$+ F_{ax\ max}$	N/bar	24	33	43	53	60	71
		$- F_{ax\ max}$	N/bar	0	0	0	0	0	0

Note

Influence of the direction of the permissible axial force:

$+ F_{ax\ max}$ = Increase in service life of bearings

$- F_{ax\ max}$ = Reduction in service life of bearings (avoid)

Direction of rotation and changing the direction of rotation

The direction of rotation of the axial piston unit is defined by means of a pressure connection screwed into the service line port and can easily be changed.
By changing the pressure connection, the service line port and the suction port are exchanged. As a result, the permissible drive direction is changed.

Direction of rotation on delivery
On delivery, the pressure connection (1) is pre-assembled in the right service line port of the axial piston unit. The permissible drive direction of the pump looking at the drive shaft: counter-clockwise. The power take-off turns clockwise.

Note
The pressure connection is pre-assembled on delivery and must be tightened to the torque specified for the thread size before installation (see table of tightening torques M_D).

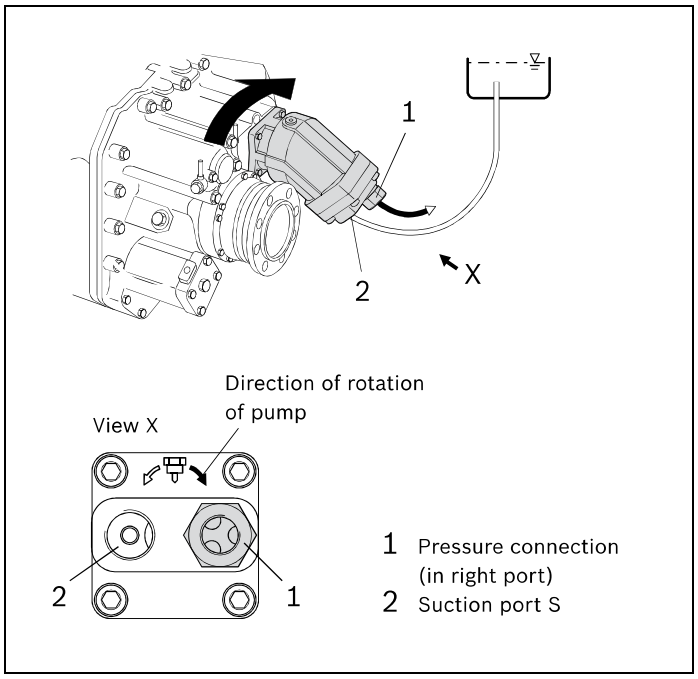

Changing the direction of rotation
For power take-offs with counter-clockwise rotation, the direction of rotation of the axial piston unit must be changed.
To change the direction of rotation of the axial piston unit, you must change the pressure connection (1) from the right port to the left port.

Note
If the pump drive shaft moves while making the change, the axial piston unit may be damaged.
After unscrewing the pressure connection, do not turn the drive shaft of the pump!

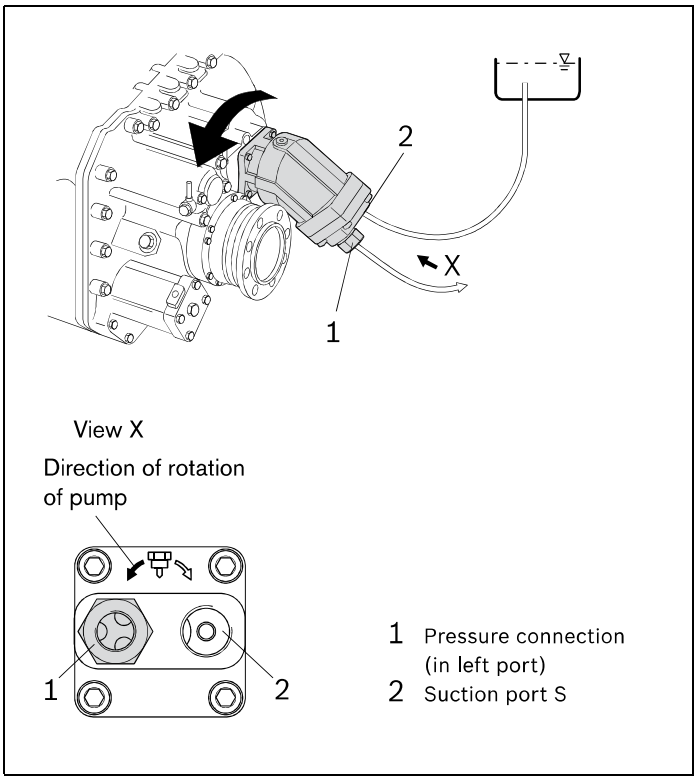

Tightening torque M_D of the pressure connection

Size	NG	23, 32	45, 63	80, 107
Tightening torque M_D	Nm	145	270	525
Size WAF	mm	36	41	50

Connecting the line to the pressure connection
If the tightening torque required for connecting the fittings used exceeds the tightening torque of the pressure connection, the pressure connection must be counterheld. The maximum permissible tightening torque of the female thread (see page 16) must not be exceeded.

Dimensions size 45

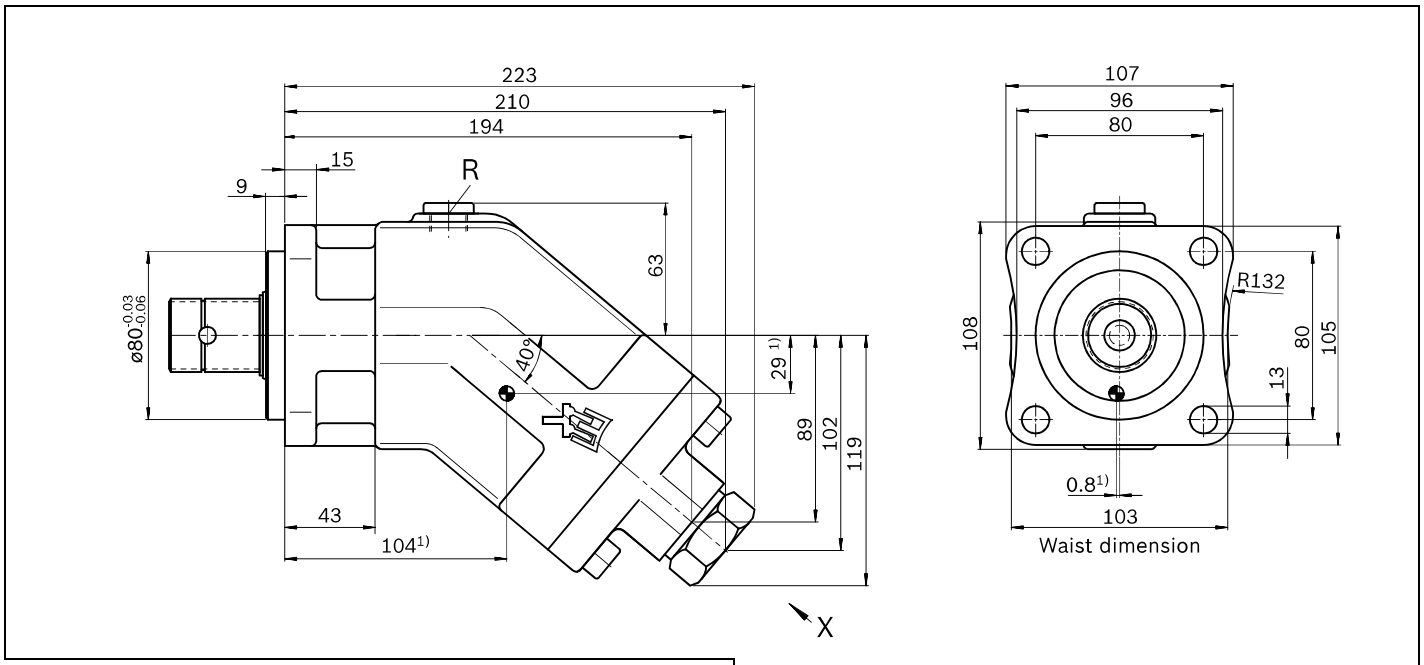

Drive shaft

Splined shaft similar to DIN ISO 14 ...with coupling flange

E8 – 8x32x35

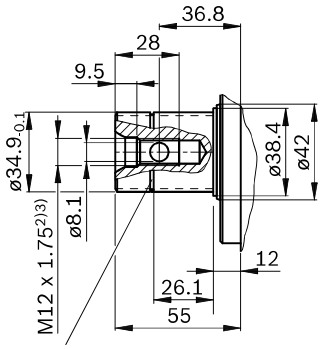

Groove for retaining ring
35 x 1.5 DIN 471

C8

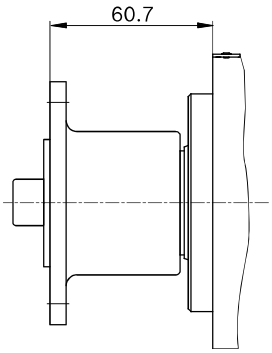

View X

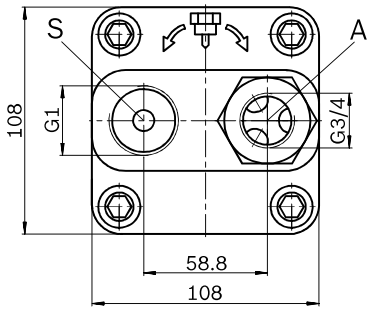

Ports

Designation	Port for	Standard	Size[3)]	Maximum pressure [bar][4)]	State[7)]
A	Service line	DIN ISO 228	G3/4; 16 deep	350	O
S	Suction line	DIN ISO 228	G1; 18 deep	2	O
R	Air bleed	DIN 3852[6)]	M10 x 1; 8 deep	2	X[5)]

1) Center of gravity
2) Center bore according to DIN 332 (thread according to DIN 13)
3) Observe the general instructions on page for the maximum tightening torques.
4) Momentary pressure spikes may occur depending on the application. Keep this in mind when selecting measuring devices and fittings.
5) Only open port R for filling and air bleed.
6) The spot face can be deeper than specified in the appropriate standard.
7) O = Must be connected (plugged on delivery)
X = Plugged (in normal operation)