PUMP DATA	PUMP I	PUMP II	PUMP III
DISPLACEMENT	40,0 ccm	33,0 ccm	16,0 ccm
MAX. PRESSURE	310 bar	SEE VALVE DATA	150 bar
SPEED RATE 500 TO 2400 min^{-1}			
MAX. INPUT SHAFT TORQUE 503 Nm			
ROTATION	ANTI CLOCKWISE		

TEST PER TEST SPECIFICATION 7049532007_TS

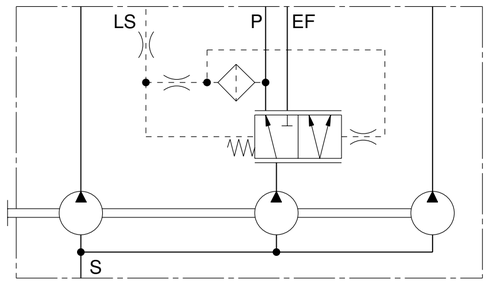

PUMP WITH LOAD SENSING PRIORITY VALVE
AND DYNAMIC LOAD SENSING SIGNAL
CONTROL PRESSURE 8.5 - 13.5 bar
MAX. PRESSURE AT EXCESS PORT (EF) 265 bar
MAX. PRESSURE AT PRIORITY PORT (P) 200 bar

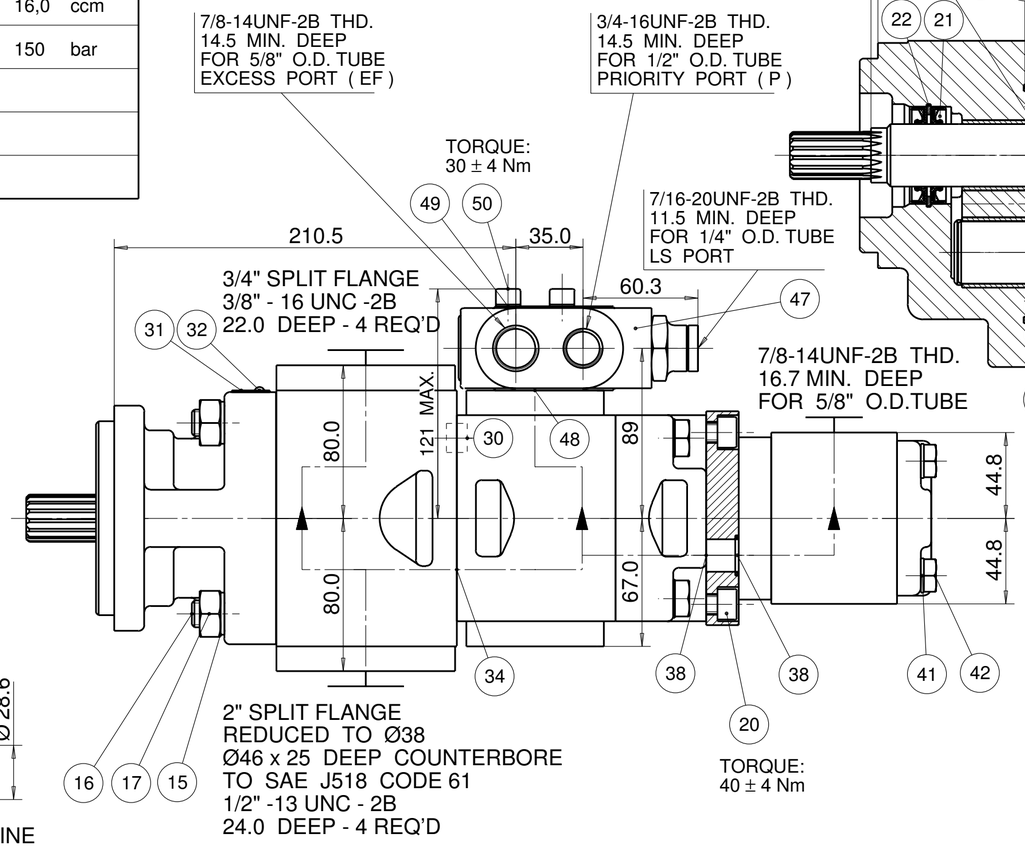

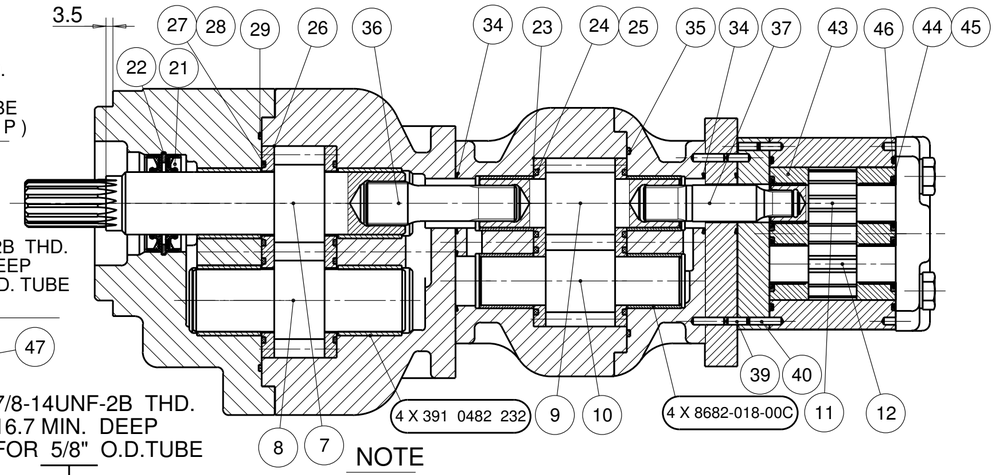

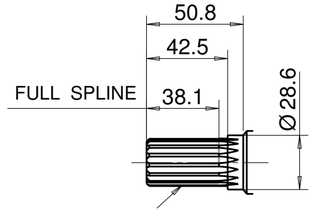

SAE INVOLUTE SPLINE
15 TEETH - 16/32 PITCH
FLAT ROOT SIDE FIT
MAJOR DIA 24.87-24.97
MINOR DIA 21.793 MAX.

VALVE NOT SHOWN
IN THIS VIEW

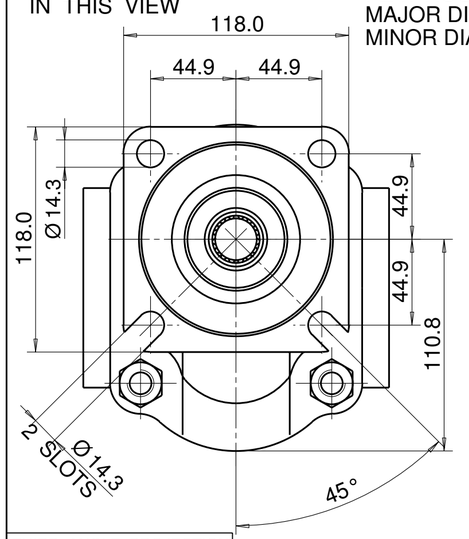

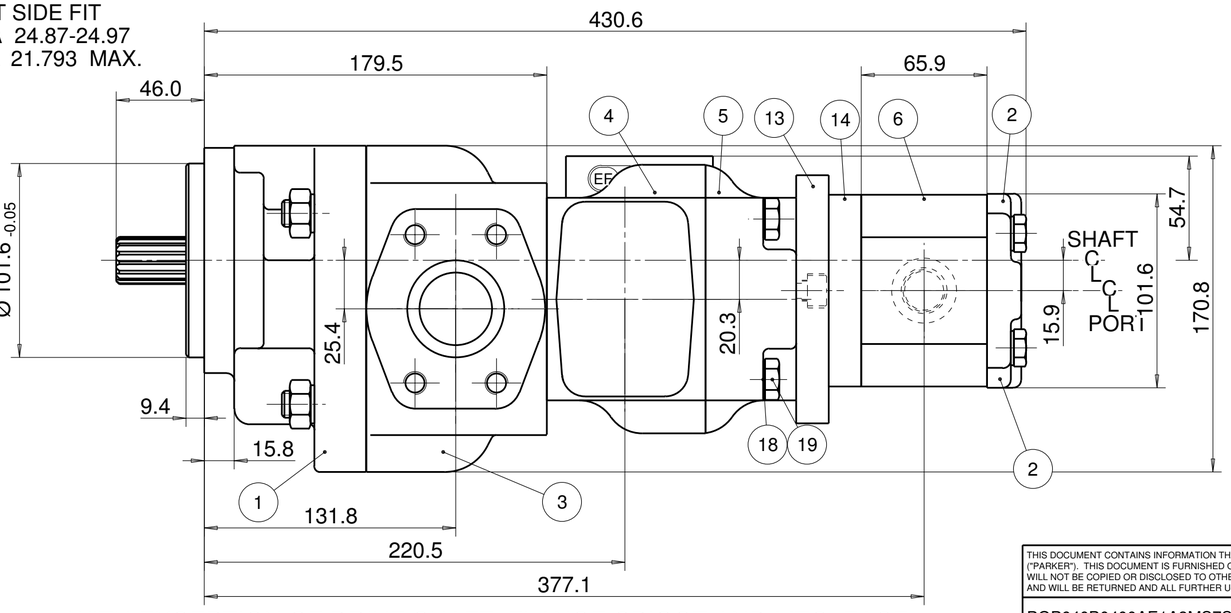

NOTE

1. FOR ASSEMBLY INSTRUCTIONS SEE DWG. NO. "640-B1";"620-B1";"511-B1" "PGP640 ; PGP620 ; PGP511 PUMP ASSEMBLY INSTRUCTIONS".

ITEM	PART NO	REQD		ITEM	PART NO	REQD	
50	9114-318-00D	3	SCREW M8	46	9313-145-00B	2	SEAL, SECT.
49	391 3782 256	3	WASHER	45	8611-015-000	2	SEAL. BK UP
48	9323-644-006	1	O-RING	44	8611-016-00R	2	SEAL. ELEM.
47	350 9612 032	1	LSPFD	43	8898-207-00U	2	BUSH. BLOCK
31	391 2183 227	1	NAMEPLATE	42	391 1401 547	4	SCREW 110
30	8676-024-003	2	HOLLOW D.	41	391 3782 231	4	WASHER
29	391 2881 611	1	SEAL. SECT.	40	391 2080 079	3	PIN, DOWEL
28	391 2882 491	2	SEAL, BK-UP	39	391 2080 078	4	PIN, DOWEL
27	391 2882 490	2	SEAL. CHANN.	38	9313-019-00G	2	O-RING
26	391 2185 143	2	THR. PLATE	37	77020:4118845	1	SFT, CONN.
25	8682-015-00Q	2	SEAL. ELEM.	36	704 1133 007	1	SFT, CONN.
24	8682-016-00L	2	SEAL. ENERG.	35	9312-641-004	1	SEAL. SECT.
23	8682-058-00M	2	THR. PLATE	34	9313-024-00W	5	O-RING
22	391 2686 016	1	RING, SNAP	33			
21	391 2883 103	2	SEAL. LIP	32	391 1432 004	2	SCREW. DR.

ITEM	PART NO	REQ'D	DESCRIPTION
20	391 1402 241	2	SCREW DIN 912 (M10X25)
19	391 1401 557	4	M12 FASTENER X140
18	9222-575-009	4	WASHER
17	391 1451 240	4	M14 NUT
16	391 1425 689	4	M14 FASTENER
15	391 3782 329	4	WASHER
14	391 2183 361	1	SPACER
13	73910:4118834	1	SPACER
12	334 2716 000	1	DRIVEN GEAR
11	334 2616 000	1	DRIVE GEAR
10	702 2733 000	1	DRIVEN GEAR
9	702 2633 010	1	DRIVE GEAR
8	704 2740 000	1	DRIVEN GEAR
7	77040:4119010	1	DRIVE GEAR
6	334 8616 310	1	BODY
5	77020:4118823	1	COVER
4	702 6933 008	1	BODY
3	704 7940 001	1	BODY
2	332 3000 100	1	COVER
1	704 5231 002	1	FLANGE

THIRD ANGLE PROJECTION

EXP NO.

FIRST USED

05 - 11 - 602

704 9532 007

07SEP06 JS 06-09-611
14JUL06 JS 06-07-620
27APR06 JS 06-04-621
22MAR06 JS 06-03-626
09FEB06 WS 06-02-614

WITH EXCEPTION OF DRIVE SHAFT, FLANGE SPIGOT AND MTG. FACE
PLUS AREAS AROUND PORTS, ALL SURFACES ARE PAINTED
BLACK ZSS - A1 (AA-O-05.2)

SYM.	REVISIONS
F	POS #42 SCREW 391 1401 547 WAS 391 1401 861
	22MAR07 RZ 07-03-625

THIS DOCUMENT CONTAINS INFORMATION THAT IS CONFIDENTIAL AND PROPRIETARY TO PARKER-HANNIFIN CORPORATION ("PARKER"). THIS DOCUMENT IS FURNISHED ON THE UNTERSTANDING THAT THE DOCUMENT AND THE INFORMATION IT CONTAINS WILL NOT BE COPIED OR DISCLOSED TO OTHERS OR USED FOR ANY PURPOSE OTHER THAN CONDUCTING BUSINESS WITH PARKER, AND WILL BE RETURNED AND ALL FURTHER USE DISCONTINUED UPON REQUEST BY PARKER. ALL RIGHTS RESERVED.

PGP640B0400AE1A3MS7S2C-620B0330XB1J6C-511A0160XB1D4B1B1+LSPV

Parker Pump & Motor Division Chemnitz

MATERIAL

H.E.-STD:

ADM CTR P

REV DTE 22MAR07

WT 39.2 kg

DIMENSIONS ARE MM

DR.BY	DATE	CH.BY	DATE	SCALE
WS	03NOV05	JS	03NOV05	1/2

704 9532 007

© 2007 Parker Hannifin Corporation