DRAWING NO:				
TF0000HK080LAAD	THIS DRAWING AND ITS INFORMATION IS CONFIDENTIAL, IT IS THE PROPERTY OF PARKER HANNIFIN CORP. AND MUST NOT BE MADE PUBLIC OR USED IN ANY WAY DETRIMENTAL TO THE INTEREST OF PARKER HANNIFIN.	DIMENSIONS AND TOLERANCES PER ASME Y14.5M – 1994	DESIGN CONTROL DIMENSIONS	inch [mm] ft–lbs [Nm]

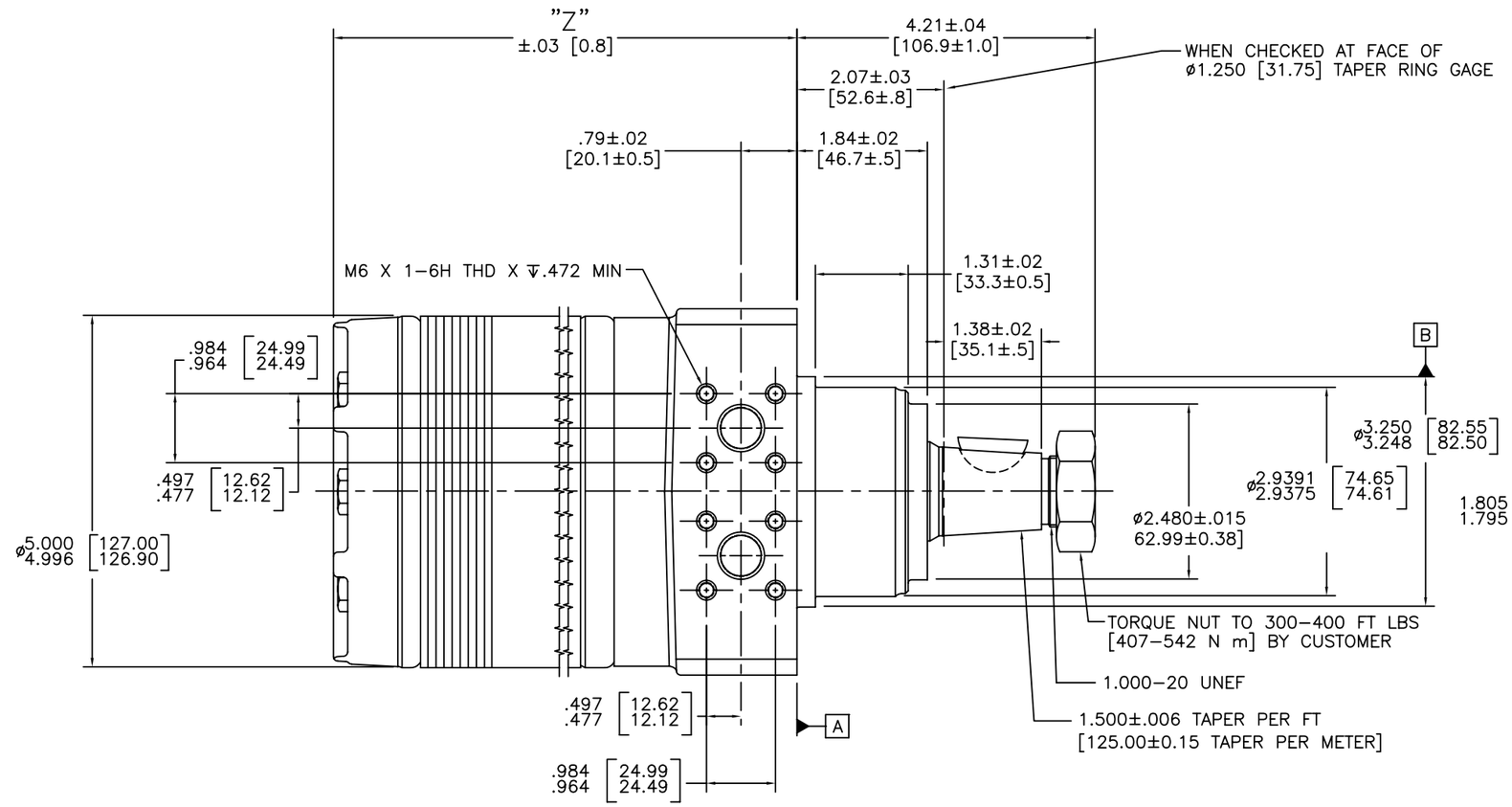

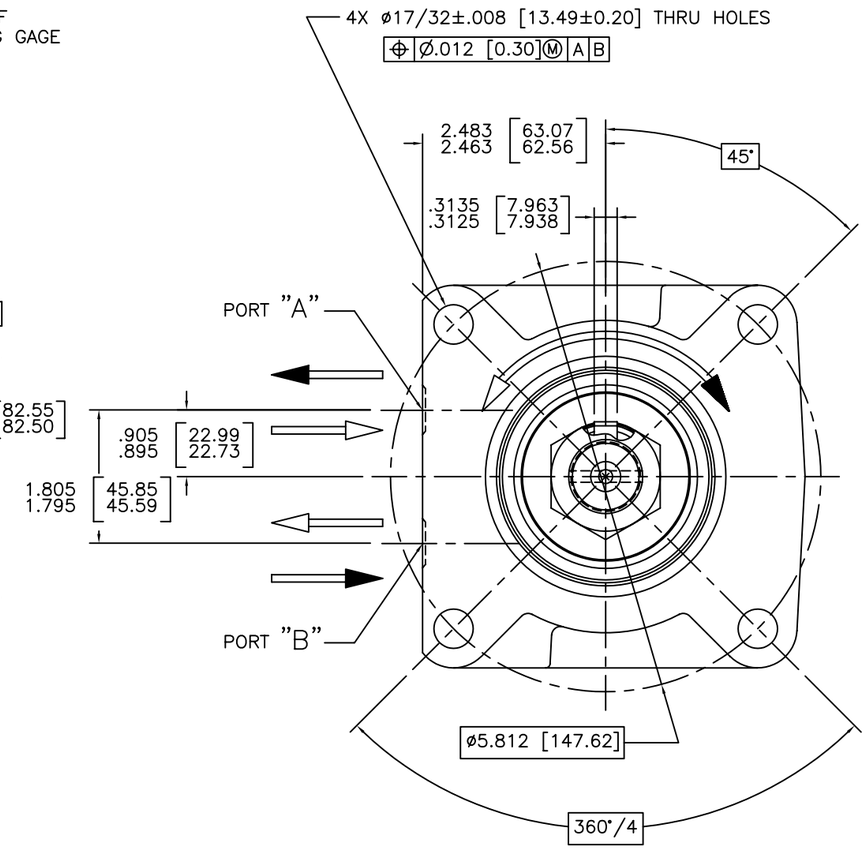

TG0140SZ080LAAD	8.6 [140]	5.92 [150.3]
MOTOR ASSY PART NO	DISPLACEMENT in³/rev [cm³/rev]	"Z"

NOTE:
THE RADIAL LOAD OF UP TO 4000 LBS. [1814 kg] MAY BE ALLOWABLE AT A DISTANCE OF 2.75 [69.9] FROM THE MOUNTING FACE. RADIAL LOAD IS CONSIDERED THE VECTOR SUM OF THE RADIAL FORCES ACTING ON THE SHAFT, SUCH AS: CHAIN PULL, GEAR FORCES AND OR WEIGHT ON A DRIVEN WHEEL. SEE SIDELOAD RATING CURVES FOR FURTHER DETAIL. CONTACT YOUR SALES ENGINEER FOR THIS COMPUTATION.

ALL DIMENSIONS ARE FOR REFERENCE ONLY

ASSEMBLY DRAWING: TG–STD01

REV	EDR NO.	DESCRIPTION	DRN	APP	DATE
AA	5–6716	RELD FOR PROD	DBC	REV	12N098

REF:
SUPERSEDES:
K#:
FIRST USED:
C.S NO:
SCALE: FULL

Parker Hannifin Corp.
Hydraulic Pump/Motor Division
Greeneville,Tn. 37744 USA

PROCESS: PT–942 APPR:
MATERIAL: APPR:
TITLE: HYDRAULIC MOTOR ASSEMBLY CHART
DRAWING NO: TG0000SZ080LAAD REV AA